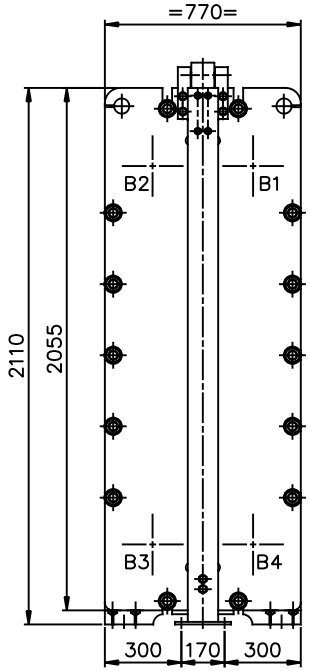

VIEW Q
REAR SIDE
SCALE: 1/15

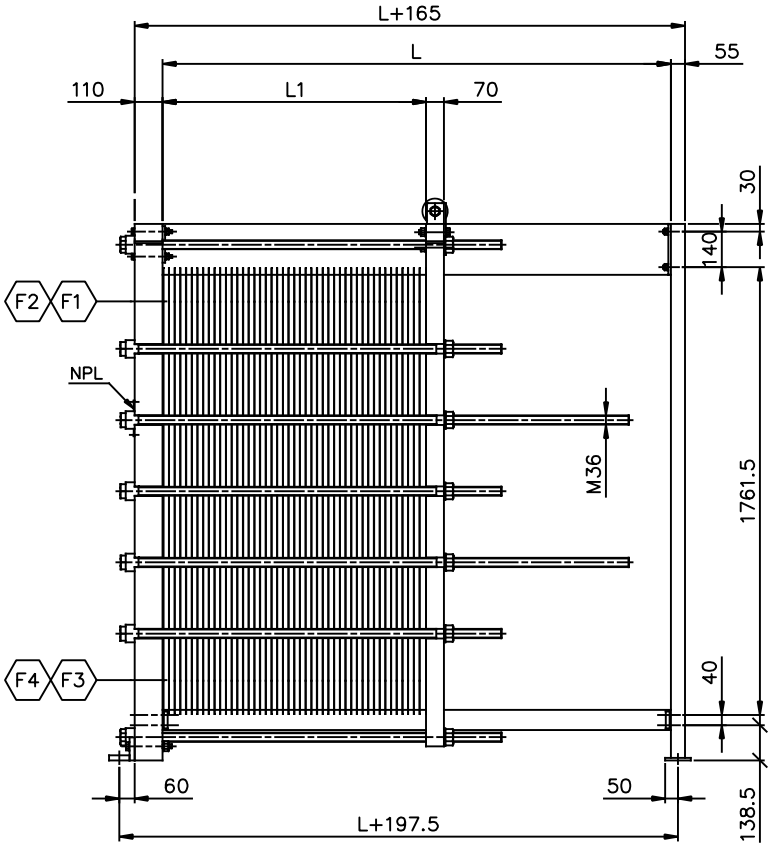

ELEVATION
SCALE: 1/15

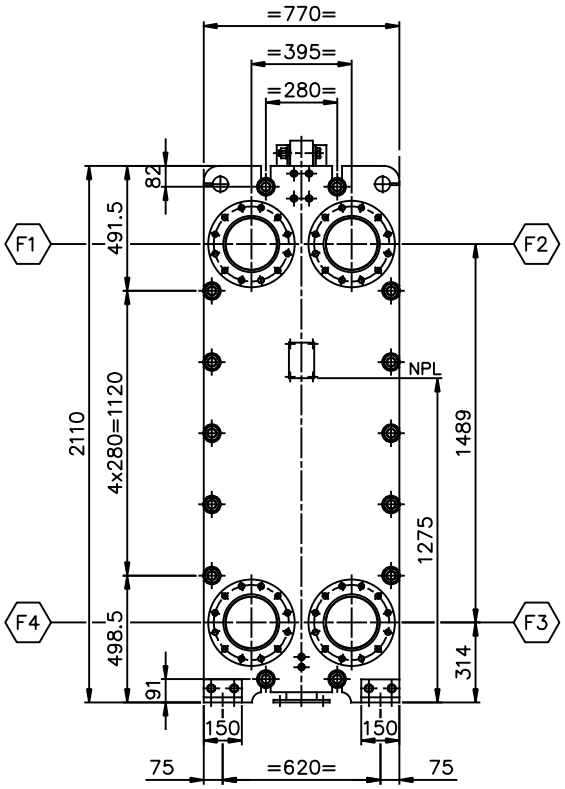

VIEW P
FRONT SIDE
SCALE: 1/15

Dimensions without tolerance:	Designed by	Approved by	Rev. no.	Revision Text	Format	Scale
	O.AKSAK	ARES	0	FOR APPROVAL	A1	1:15+VAR.
ISOprojektion	ARES PHE		Description: PHE MODEL: A8L PN25 L=600 ÷ 2000 MM GENERAL ARRANGEMENT			
			Rev.date	Rev.by	Drawing no.	Sheet
			15-08-'12	HE	A8L-10025-01	1 OF 1